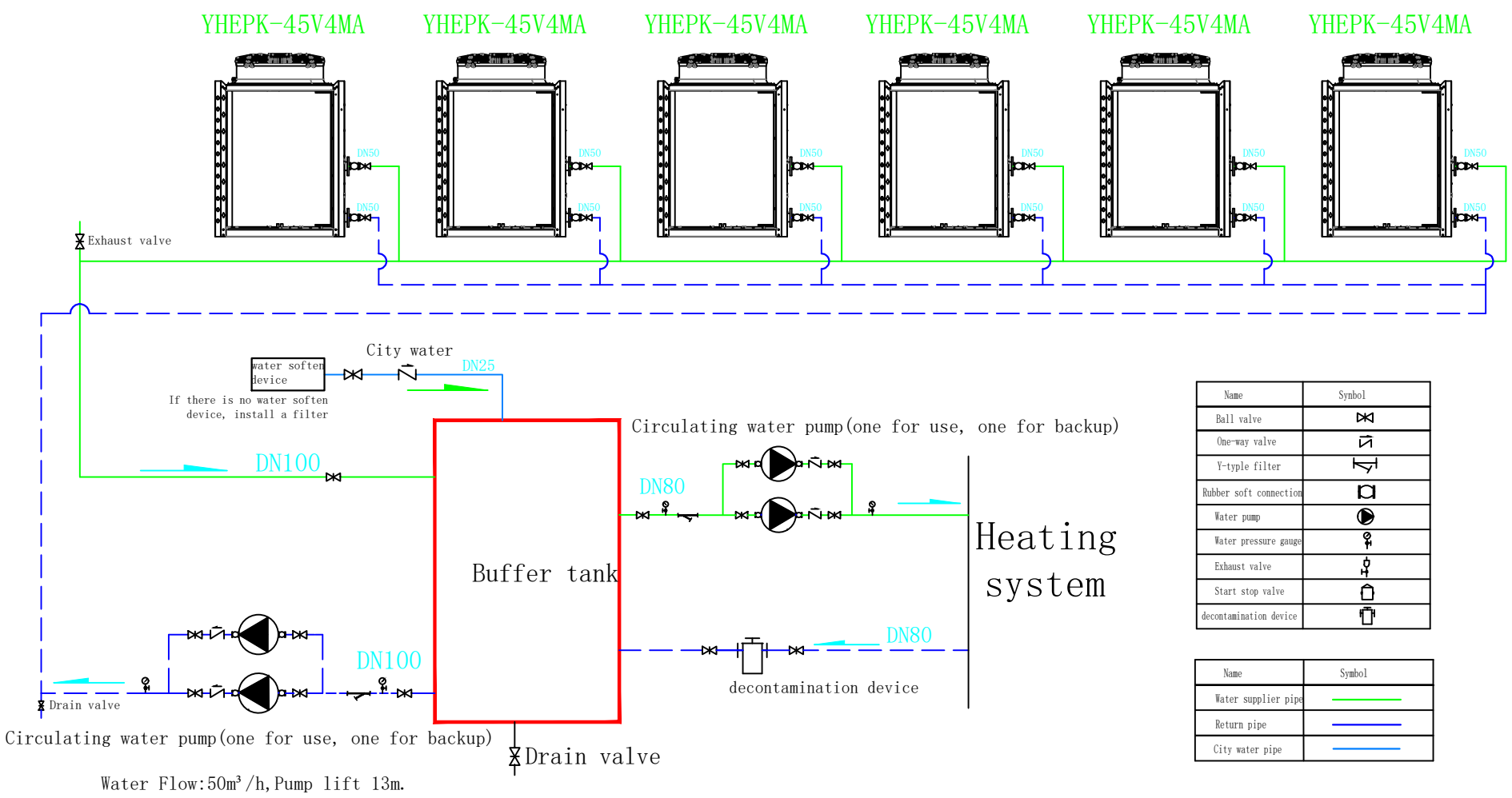


| Name | Synbol |
|---|---|
| Ball valve | |
| One-way valve | |
| Y-typle filter | |
| Rubber soft connection | |
| Water pump | |
| Water pressure gauge | |
| Exhaust valve | |
| Start stop valve | |
| decontamination device | |

| Name | Symbol |
|---|---|
| Water supplier pipe | |
| Return pipe | |
| City water pipe | |